Lab 5 – Configuring Rapid PVST+, PortFast and BPDU Guard

Important for Online Workshop Students Only:

You must use Packet Tracer v8.2.2 to complete this lab.

Please rename your Packet Tracer file to FirstName_LastName_sNumber_Lab5.pka

Scoring

No.		Score
1	PC-A	4
2	PC-C	4
3	S1	44
4	S2	33
5	S3	39

Topology

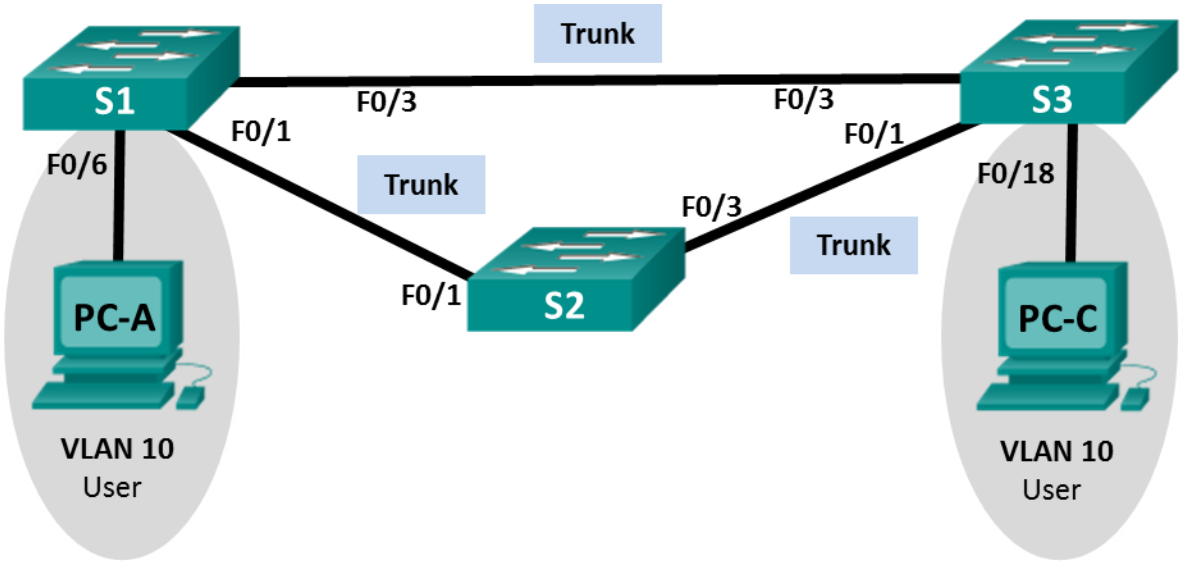

© 2025 Cisco and/or its affiliates. All rights reserved. This document is Cisco Public.

Addressing Table

Device	Interface	IP Address	Subnet Mask
S1	VLAN 99	192.168.1.11	255.255.255.0
S2	VLAN 99	192.168.1.12	255.255.255.0
S3	VLAN 99	192.168.1.13	255.255.255.0
PC-A	NIC	192.168.0.2	255.255.255.0
PC-C	NIC	192.168.0.3	255.255.255.0

VLAN Assignments

VLAN	Name	Interface Assigned
10	User	S1: F0/6 S3: F0/18
99	Management	S1: VLAN 99 S2: VLAN 99 S3: VLAN 99
1000	Native	N/A

Objectives

Part 1: Build the Network and Configure Basic Device Settings

Part 2: Configure VLANs, Native VLAN, and Trunks

Part 3: Configure the Root Bridge and Examine PVST+ Convergence

Part 4: Configure Rapid PVST+, PortFast, BPDU Guard, and Examine Convergence

Background / Scenario

The Per-VLAN Spanning Tree (PVST+) protocol is Cisco proprietary. Cisco switches default to PVST+. Rapid PVST+ (IEEE 802.1w) is an enhanced version of PVST+ and allows for faster spanning-tree calculations and convergence in response to Layer 2 topology changes. Rapid PVST+ defines three port states: discarding, learning, and forwarding, and provides multiple enhancements to optimize network performance.

In this lab, you will configure the primary and secondary root bridge, examine PVST+ convergence, configure Rapid PVST+ and compare its convergence to PVST+. In addition, you will configure edge ports to transition immediately to a forwarding state using PortFast and prevent the edge ports from forwarding BDPUs using BDPU guard.

Note: For students in on-campus workshops only: Make sure that the switch has been erased and has no startup configurations. Please refer to Appendix A

Note: For students in online workshops only: In Packet Tracer, you must use the 2960 switch

© 2025 Cisco and/or its affiliates. All rights reserved. This document is Cisco Public.

Part 1: Build the Network and Configure Basic Device Settings

In Part 1, you will set up the network topology and configure basic settings, such as the interface IP addresses, device access, and passwords.

Step 1: Cable the network as shown in the topology.

Step 2: Configure PC hosts.

Step 3: Initialize and reload the switches as necessary.

Step 4: Configure basic settings for each switch.

a. Assign a device name to the switch.

b. Disable DNS lookup.

c. Assign class as the privileged EXEC encrypted password.

d. Assign cisco as the console password and enable login.

e. Assign cisco as the vty password and enable login.

f. Configure logging synchronous for the console line and vty line.

g. Encrypt the plaintext passwords.

a. Create a banner that warns anyone accessing the device that unauthorized access is prohibited. The banner text must be exact:

```
S1(config)# banner motd 'Unauthorised access is prohibited strictly and
                         will be prosecuted.'
```

h. Configure the switch for SSH access with **`domain networklab.com`** and 1024 bits RSA encryption. Use **`username admin`** and **`password cisco`** with **`privilege level 15`**.

i. Administratively shut down all switch ports, including the gigabitethernet ports. Required ports will be selectively enabled later in the lab.

Example for S1:

```
S1(config)# interface range f0/1-24
S1(config-if-range)# shutdown
S1(config-if-range)# exit

S1(config)# interface range g0/1-2
S1(config-if-range)# shutdown
S1(config-if-range)# exit
```

© 2025 Cisco and/or its affiliates. All rights reserved. This document is Cisco Public.

Part 2: Configure VLANs, Native VLAN, and Trunks

In Part 2, you will create VLANs, assign switch ports to VLANs, configure trunk ports, and change the native VLAN for all switches.

Step 1: Create VLANs.

Use the appropriate commands to create and name the required VLANs on all of the switches from the table above. See lab 4 for a refresher on creating and naming VLANs.

Example for S1:

```
S1(config)# vlan 10
S1(config-vlan)# name User
S1(config-vlan)# exit
S1(config)# vlan 99
S1(config-vlan)# name Management
S1(config-vlan)# exit
S1(config)# vlan 1000
S1(config-vlan)# name Native
S1(config-vlan)# exit
```

Step 2: Enable user ports in access mode and assign VLANs.

For S1 F0/6 and S3 F0/18, enable the ports, configure them as access ports, and assign them to VLAN 10.

Example for S1:

```
S1(config)# interface f0/6
S1(config-if)# no shutdown
S1(config-if)# switchport mode access
S1(config-if)# switchport access vlan 10
S1(config-if)# exit
```

© 2025 Cisco and/or its affiliates. All rights reserved. This document is Cisco Public.

Step 3: Configure trunk ports.

For ports F0/1 and F0/3 on all switches, enable the ports, configure them as trunk ports, assign them to native VLAN 1000, and specify that VLANs 10, 99 and 1000 are allowed to cross the trunks. See lab 4 for a refresher on configuring trunk ports.

Example for S1:

```
S1(config)# interface f0/1
S1(config-if)# no shutdown
S1(config-if)# switchport mode trunk
S1(config-if)# switchport trunk native vlan 1000
S1(config-if)# switchport trunk allowed vlan 10,99,1000
S1(config-if)# exit
S1(config)# interface f0/3
S1(config-if)# no shutdown
S1(config-if)# switchport mode trunk
S1(config-if)# switchport trunk native vlan 1000
S1(config-if)# switchport trunk allowed vlan 10,99,1000
S1(config-if)# exit
```

Step 4: Configure the management interface on all switches.

Using the Addressing Table, configure the management interface on all switches with the appropriate IP address.

Example for S1:

```
S1(config)# interface vlan 99
S1(config-if)# ip address 192.168.1.11 255.255.255.0
S1(config-if)# end
```

Step 5: Verify configurations and connectivity.

Use the **show vlan brief** command on all switches to verify that all VLANs are registered in the VLAN table and that the correct ports are assigned.

Use the **show interfaces trunk** command on all switches to verify trunk interfaces.

Use the **show running-config** command on all switches to verify all other configurations.

What is the default setting for spanning-tree mode on Cisco switches?

_____

Verify connectivity between PC-A and PC-C. Was your ping successful? _____

If your ping was unsuccessful, troubleshoot the configurations until the issue is resolved.

© 2025 Cisco and/or its affiliates. All rights reserved. This document is Cisco Public.

Part 3: Configure the Root Bridge and Examine PVST+ Convergence

In Part 3, you will determine the default root in the network, assign the primary and secondary root, and use the **debug** command to examine convergence of PVST+.

Step 1: Determine the current root bridge.

Which command allows a user to determine the spanning-tree status of a Cisco Catalyst switch for all VLANs? Write the command in the space provided.

_____

Use the command on all three switches to determine the answers to the following questions:

Note: After this configuration, there are three instances of the spanning tree on each switch (VLAN 10, VLAN 99, VLAN 100). The default STP configuration on Cisco switches is PVST+, which creates a separate spanning tree instance for each active VLAN.

What is the bridge priority of switch S1 for VLAN 10? _____

What is the bridge priority of switch S2 for VLAN 10? _____

What is the bridge priority of switch S3 for VLAN 10? _____

Which switch is the root bridge? _____

Why was this switch elected as the root bridge?

_____

Step 2: Configure a primary and secondary root bridge for all existing VLANs.

Having a root bridge (switch) elected by MAC address may lead to a suboptimal configuration. In this lab, you will configure switch S2 as the root bridge and S1 as the secondary root bridge.

a. Configure switch S2 to be the primary root bridge for all existing VLANs.

   Example:

```
S2(config)# spanning-tree vlan 10 root primary
S2(config)# spanning-tree vlan 99 root primary
S2(config)# spanning-tree vlan 1000 root primary
```

b. Configure switch S1 to be the secondary root bridge for all existing VLANs.

```
S1(config)# spanning-tree vlan 10 root secondary
S1(config)# spanning-tree vlan 99 root secondary
S1(config)# spanning-tree vlan 1000 root secondary
```

   Use the **show spanning-tree** command to answer the following questions:

   What is the bridge priority of S1 for VLAN 10? _____

   What is the bridge priority of S2 for VLAN 10? _____

   Which interface in the network is in a blocking state? _____

© 2025 Cisco and/or its affiliates. All rights reserved. This document is Cisco Public.

Step 3: Change the Layer 2 topology and examine convergence.

To examine PVST+ convergence, you will create a Layer 2 topology change while using the **debug** command to monitor spanning-tree events.

a. For students in the on-campus workshops, you would enter the **debug spanning-tree events** command in privileged EXEC mode on switch S3.

```
S3# debug spanning-tree events
Spanning Tree event debugging is on
```

For students in online workshops, Packet Tracer does not support this command. So for the remainder of Part 3: Step 3, you will use the debugging output shown below to help you answer the questions in Part 3: Step 3 – Debugging steps highlighted below in yellow.

b. Create a topology change by disabling interface F0/1 on S3.

```
S3(config)# interface f0/1
S3(config-if)# shutdown
*Mar  1 00:58:56.225: STP: VLAN0001 new root port Fa0/3, cost 38
*Mar  1 00:58:56.225: STP: VLAN0001 Fa0/3 -> listening
*Mar  1 00:58:56.225: STP[1]: Generating TC trap for port FastEthernet0/1
*Mar  1 00:58:56.225: STP: VLAN0010 new root port Fa0/3, cost 38
*Mar  1 00:58:56.225: STP: VLAN0010 Fa0/3 -> listening
*Mar  1 00:58:56.225: STP[10]: Generating TC trap for port FastEthernet0/1
*Mar  1 00:58:56.225: STP: VLAN0099 new root port Fa0/3, cost 38
*Mar  1 00:58:56.225: STP: VLAN0099 Fa0/3 -> listening
*Mar  1 00:58:56.225: STP[99]: Generating TC trap for port FastEthernet0/1
*Mar  1 00:58:56.242: %LINEPROTO-5-UPDOWN: Line protocol on Interface Vlan1, changed
state to down
*Mar  1 00:58:56.242: %LINEPROTO-5-UPDOWN: Line protocol on Interface Vlan99, changed
state to down
*Mar  1 00:58:58.214: %LINK-5-CHANGED: Interface FastEthernet0/1, changed state to
administratively down
*Mar  1 00:58:58.230: STP: VLAN0001 sent Topology Change Notice on Fa0/3
*Mar  1 00:58:58.230: STP: VLAN0010 sent Topology Change Notice on Fa0/3
*Mar  1 00:58:58.230: STP: VLAN0099 sent Topology Change Notice on Fa0/3
*Mar  1 00:58:59.220: %LINEPROTO-5-UPDOWN: Line protocol on Interface FastEthernet0/1,
changed state to down
*Mar  1 00:59:11.233: STP: VLAN0001 Fa0/3 -> learning
*Mar  1 00:59:11.233: STP: VLAN0010 Fa0/3 -> learning
*Mar  1 00:59:11.233: STP: VLAN0099 Fa0/3 -> learning
*Mar  1 00:59:26.240: STP[1]: Generating TC trap for port FastEthernet0/3
*Mar  1 00:59:26.240: STP: VLAN0001 Fa0/3 -> forwarding
*Mar  1 00:59:26.240: STP[10]: Generating TC trap for port FastEthernet0/3
*Mar  1 00:59:26.240: STP: VLAN0010 sent Topology Change Notice on Fa0/3
*Mar  1 00:59:26.240: STP: VLAN0010 Fa0/3 -> forwarding
*Mar  1 00:59:26.240: STP[99]: Generating TC trap for port FastEthernet0/3
*Mar  1 00:59:26.240: STP: VLAN0099 Fa0/3 -> forwarding
*Mar  1 00:59:26.248: %LINEPROTO-5-UPDOWN: Line protocol on Interface Vlan1, changed
state to up
*Mar  1 00:59:26.248: %LINEPROTO-5-UPDOWN: Line protocol on Interface Vlan99, changed
state to up
```

© 2025 Cisco and/or its affiliates. All rights reserved. This document is Cisco Public.

Note: Before proceeding, use the **debug** output to verify that all VLANs on F0/3 have reached a forwarding state then use the command **no debug spanning-tree events** to stop the **debug** output. For online students, please use the log output above as the spanning-tree events command is not implemented on packet tracer.

Through which port states do each VLAN on F0/3 proceed during network convergence?

_____

Using the time stamp from the first and last STP debug message, calculate the time (to the nearest second) that it took for the network to converge. **Hint**: The debug timestamp format is date hh.mm.ss:msec.

_____

Part 4: Configure Rapid PVST+, PortFast, BPDU Guard, and Examine Convergence

In Part 4, you will configure Rapid PVST+ on all switches. You will configure PortFast and BPDU guard on all access ports, and then use the **debug** command to examine Rapid PVST+ convergence.

Step 1: Configure Rapid PVST+.

a. Configure S1 for Rapid PVST+.

```
S1(config)# spanning-tree mode rapid-pvst
```

b. Now configure S2 and S3 for Rapid PVST+.

c. Verify configurations on S1, S2, S3 with the **show running-config | include spanning-tree mode** command.

Example on S1:

```
S1# show running-config | include spanning-tree mode
spanning-tree mode rapid-pvst
```

Note: If you run the above command and see: **`spanning-tree mode pvst`** then you have not configured rapid-pvst. Review the command in Step 1 part a and part b above and fix as needed.

Step 2: Configure PortFast and BPDU Guard on access ports.

PortFast is a feature of spanning tree that transitions a port immediately to a forwarding state as soon as it is turned on. This is useful in connecting hosts so that they can start communicating on the VLAN instantly, rather than waiting on spanning tree. To prevent ports that are configured with PortFast from forwarding BPDUs, which could change the spanning tree topology, BPDU guard can be enabled. At the receipt of a BPDU, BPDU guard disables a port configured with PortFast.

a. Configure interface F0/6 on S1 with PortFast.

Example on S1:

```
S1(config)# interface fastethernet 0/6
S1(config-if)# spanning-tree portfast
```

b. Configure interface F0/6 on S1 with BPDU guard.

© 2025 Cisco and/or its affiliates. All rights reserved. This document is Cisco Public.

Example on S1:

```
S1(config-if)# spanning-tree bpduguard enable
```

c. Now configure interface F0/18 on S3 with PortFast.

d. Now configure interface F0/18 on S3 with BPDU guard.

Step 3: Examine Rapid PVST+ convergence.

a. For students in the on-campus workshops, you would enter the **debug spanning-tree events** command in privileged EXEC mode on switch S3.

For students in online workshops, Packet Tracer does not support this command. So for the remainder of Part 4: Step 3, you will use the debugging output shown below to help you answer the questions in Part 4: Step 3.

b. Create a topology change by enabling interface F0/1 on switch S3.

```
S3(config)# interface f0/1
S3(config-if)# no shutdown
*Mar  1 01:28:34.946: %LINK-3-UPDOWN: Interface FastEthernet0/1, changed state to up
*Mar  1 01:28:37.588: RSTP(1): initializing port Fa0/1
*Mar  1 01:28:37.588: RSTP(1): Fa0/1 is now designated
*Mar  1 01:28:37.588: RSTP(10): initializing port Fa0/1
*Mar  1 01:28:37.588: RSTP(10): Fa0/1 is now designated
*Mar  1 01:28:37.588: RSTP(99): initializing port Fa0/1
*Mar  1 01:28:37.588: RSTP(99): Fa0/1 is now designated
*Mar  1 01:28:37.597: RSTP(1): transmitting a proposal on Fa0/1
*Mar  1 01:28:37.597: RSTP(10): transmitting a proposal on Fa0/1
*Mar  1 01:28:37.597: RSTP(99): transmitting a proposal on Fa0/1
*Mar  1 01:28:37.597: RSTP(1): updt roles, received superior bpdu on Fa0/1
*Mar  1 01:28:37.597: RSTP(1): Fa0/1 is now root port
*Mar  1 01:28:37.597: RSTP(1): Fa0/3 blocked by re-root
*Mar  1 01:28:37.597: RSTP(1): synced Fa0/1
*Mar  1 01:28:37.597: RSTP(1): Fa0/3 is now alternate
*Mar  1 01:28:37.597: RSTP(10): updt roles, received superior bpdu on Fa0/1
*Mar  1 01:28:37.597: RSTP(10): Fa0/1 is now root port
*Mar  1 01:28:37.597: RSTP(10): Fa0/3 blocked by re-root
*Mar  1 01:28:37.597: RSTP(10): synced Fa0/1
*Mar  1 01:28:37.597: RSTP(10): Fa0/3 is now alternate
*Mar  1 01:28:37.597: RSTP(99): updt roles, received superior bpdu on Fa0/1
*Mar  1 01:28:37.605: RSTP(99): Fa0/1 is now root port
*Mar  1 01:28:37.605: RSTP(99): Fa0/3 blocked by re-root
*Mar  1 01:28:37.605: RSTP(99): synced Fa0/1
*Mar  1 01:28:37.605: RSTP(99): Fa0/3 is now alternate
*Mar  1 01:28:37.605: STP[1]: Generating TC trap for port FastEthernet0/1
*Mar  1 01:28:37.605: STP[10]: Generating TC trap for port FastEthernet0/1
*Mar  1 01:28:37.605: STP[99]: Generating TC trap for port FastEthernet0/1
*Mar  1 01:28:37.622: RSTP(1): transmitting an agreement on Fa0/1 as a response to a
proposal
*Mar  1 01:28:37.622: RSTP(10): transmitting an agreement on Fa0/1 as a response to a
proposal
```

© 2025 Cisco and/or its affiliates. All rights reserved. This document is Cisco Public.

```
*Mar  1 01:28:37.622: RSTP(99): transmitting an agreement on Fa0/1 as a response to a proposal
*Mar  1 01:28:38.595: %LINEPROTO-5-UPDOWN: Line protocol on Interface FastEthernet0/1, changed state to up
```

Using the time stamp from the first and last RSTP debug message, calculate the time that it took for the network to converge.

_____

_____

Reflection

1. What is the main benefit of using Rapid PVST+?

   _____

2. How does configuring a port with PortFast allow for faster convergence?

   _____

3. What protection does BPDU guard provide?

   _____

   _____

© 2025 Cisco and/or its affiliates. All rights reserved. This document is Cisco Public.

Appendix A: Initializing and Reloading a Switch

Initialize and reload the switch.

a. Console into the switch and enter privileged EXEC mode.

```
Switch> enable
Switch#
```

b. Use the **show flash** command to determine if any VLANs have been created on the switch.

```
Switch# show flash
Directory of flash:/
    2  -rwx        1919   Mar 1 1993 00:06:33 +00:00  private-config.text
    3  -rwx        1632   Mar 1 1993 00:06:33 +00:00  config.text
    4  -rwx       13336   Mar 1 1993 00:06:33 +00:00  multiple-fs
    5  -rwx    11607161   Mar 1 1993 02:37:06 +00:00  c2960-lanbasek9-mz.150-2.SE.bin
    6  -rwx         616   Mar 1 1993 00:07:13 +00:00  vlan.dat
32514048 bytes total (20886528 bytes free)
Switch#
```

c. If the **vlan.dat** file was found in flash, then delete this file.

```
Switch# delete vlan.dat
Delete filename [vlan.dat]?
```

d. You are prompted to verify the filename. At this point, you can change the filename or just press Enter if you have entered the name correctly.

e. You are prompted to confirm deleting this file. Press Enter to confirm deletion. (Pressing any other key aborts the deletion.)

```
Delete flash:/vlan.dat? [confirm]
Switch#
```

f. Use the **erase startup-config** command to erase the startup configuration file from NVRAM. You are prompted to confirm removing the configuration file. Press Enter to confirm to erase this file. (Pressing any other key aborts the operation.)

```
Switch# erase startup-config
Erasing the nvram filesystem will remove all configuration files! Continue? [confirm]
[OK]
Erase of nvram: complete
Switch#
```

g. Reload the switch to remove any old configuration information from memory. You are prompted to confirm reloading the switch. Press Enter to proceed with the reload. (Pressing any other key aborts the reload.)

```
Switch# reload
Proceed with reload? [confirm]
```

Note: You may be prompted to save the running configuration prior to reloading the switch. Type **no** and press Enter.

```
System configuration has been modified. Save? [yes/no]: no
```

h. After the switch reloads, you should be prompted to enter the initial configuration dialog. Type **no** and press Enter.

```
Would you like to enter the initial configuration dialog? [yes/no]: no
Switch>
```

© 2025 Cisco and/or its affiliates. All rights reserved. This document is Cisco Public.